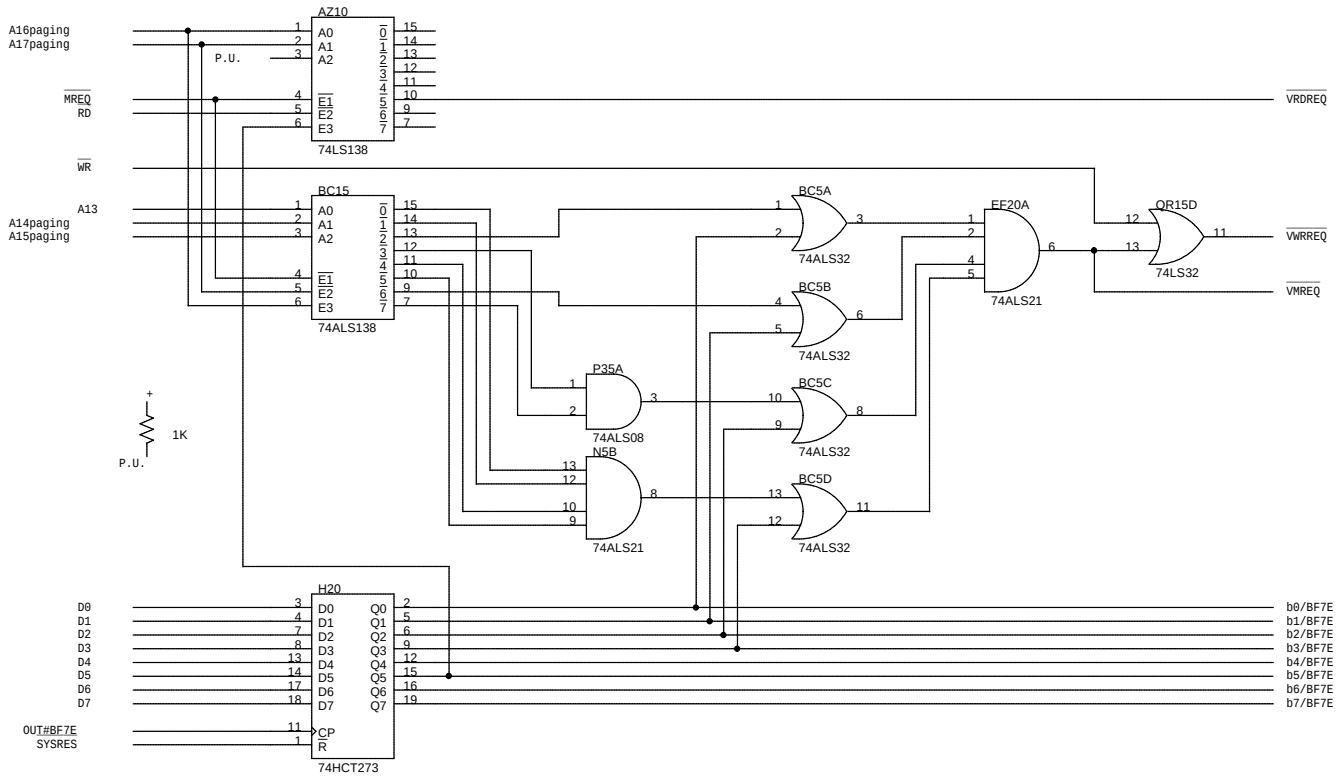


SECARICA / SPEC3_14M_06